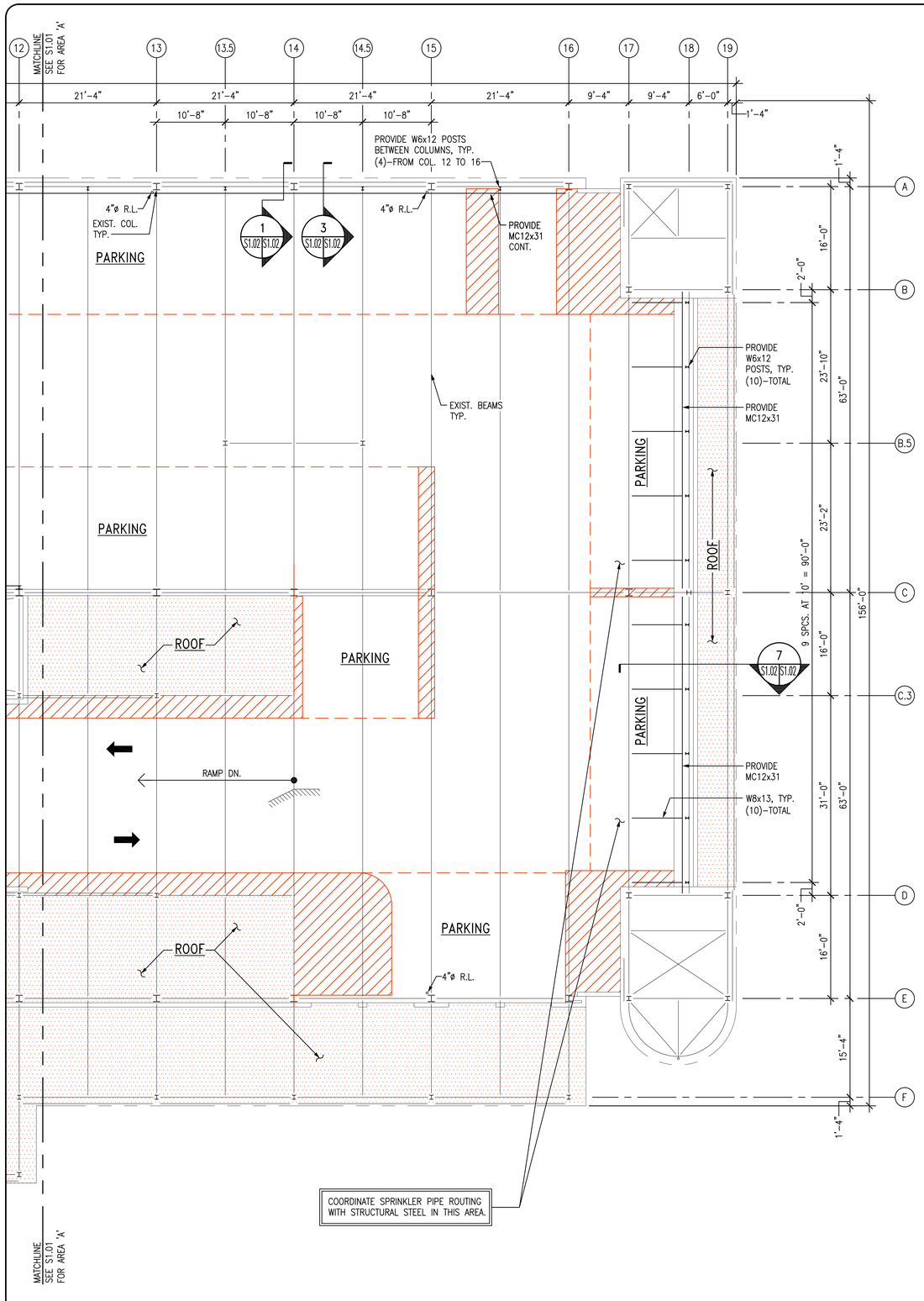

SECOND LEVEL GUARDRAIL PLAN – AREA 'B'
1/8" = 1'-0"

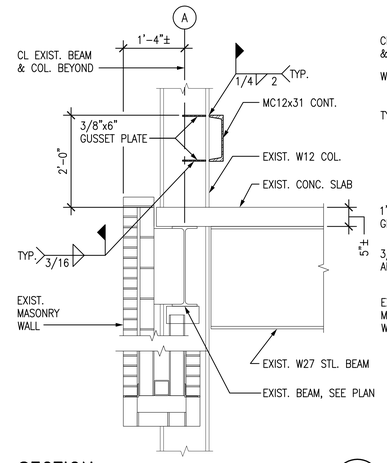

SECTION 1
3/4" = 1'-0"

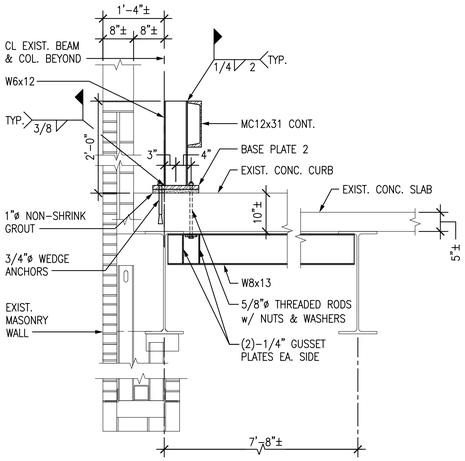

SECTION 2
3/4" = 1'-0"

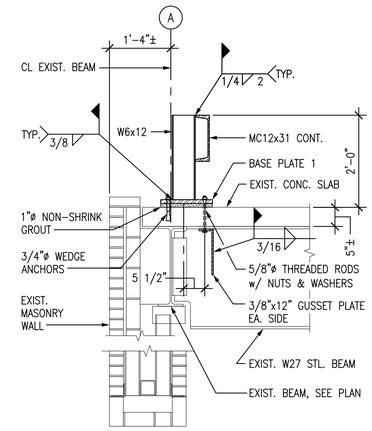

SECTION 3
3/4" = 1'-0"

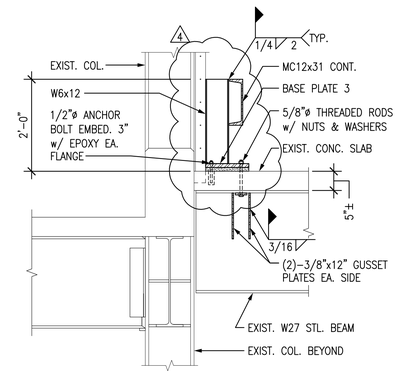

SECTION 4
3/4" = 1'-0"

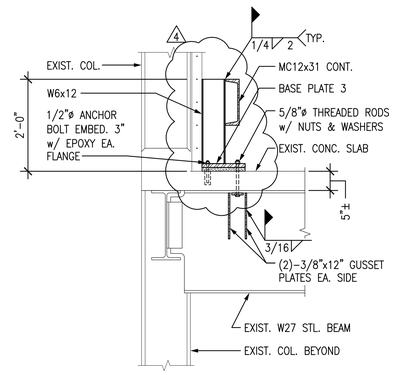

SECTION 5
3/4" = 1'-0"

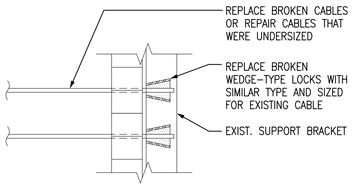

TYPICAL CABLE REPAIR DETAIL
NOT TO SCALE

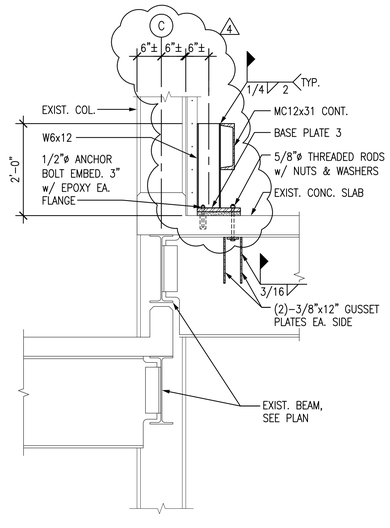

SECTION 6
3/4" = 1'-0"

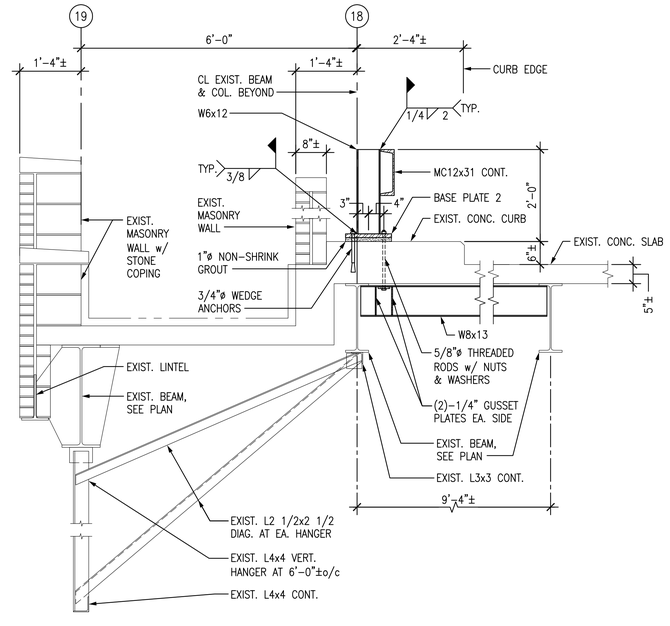

SECTION 7
3/4" = 1'-0"

COMMONWEALTH OF VIRGINIA
GLENN C. OTTO
Lic. No. 33327
1·18·11
PROFESSIONAL ENGINEER

DATE:	CAD:	DWG:	REV:	PROJ. NO:
1-18-11	PKZ	GCO	GCO	10-282

McPHERSON DESIGN GROUP p.c.
STRUCTURAL ENGINEERS
6271 Center Drive, Suite 100
Norfolk, Virginia 23502-1110
Phone (757) 965-2000 • Facsimile (757) 965-2001
www.McPhersonDesignGroup.com

REVISIONS:		
No.	DATE:	DESCRIPTION:
1	1-20-11	REVISED FOR SUBMITTAL
2	1-31-11	ADDED NOTES
3	1-30-12	MOVED POSTS TO CLEAR CABLES

SETTLER'S LANDING PARKING GARAGE
GUARDRAILS

SECOND LEVEL GUARDRAIL PLAN - AREA 'B', AND SECTIONS

S1.02

SHEET 4 OF 8

Copyright 2010 McPherson Design Group, P.C. Any reproduction or unauthorized use of this document or any part of this document without the expressed written consent of McPherson Design Group P.C. is prohibited.